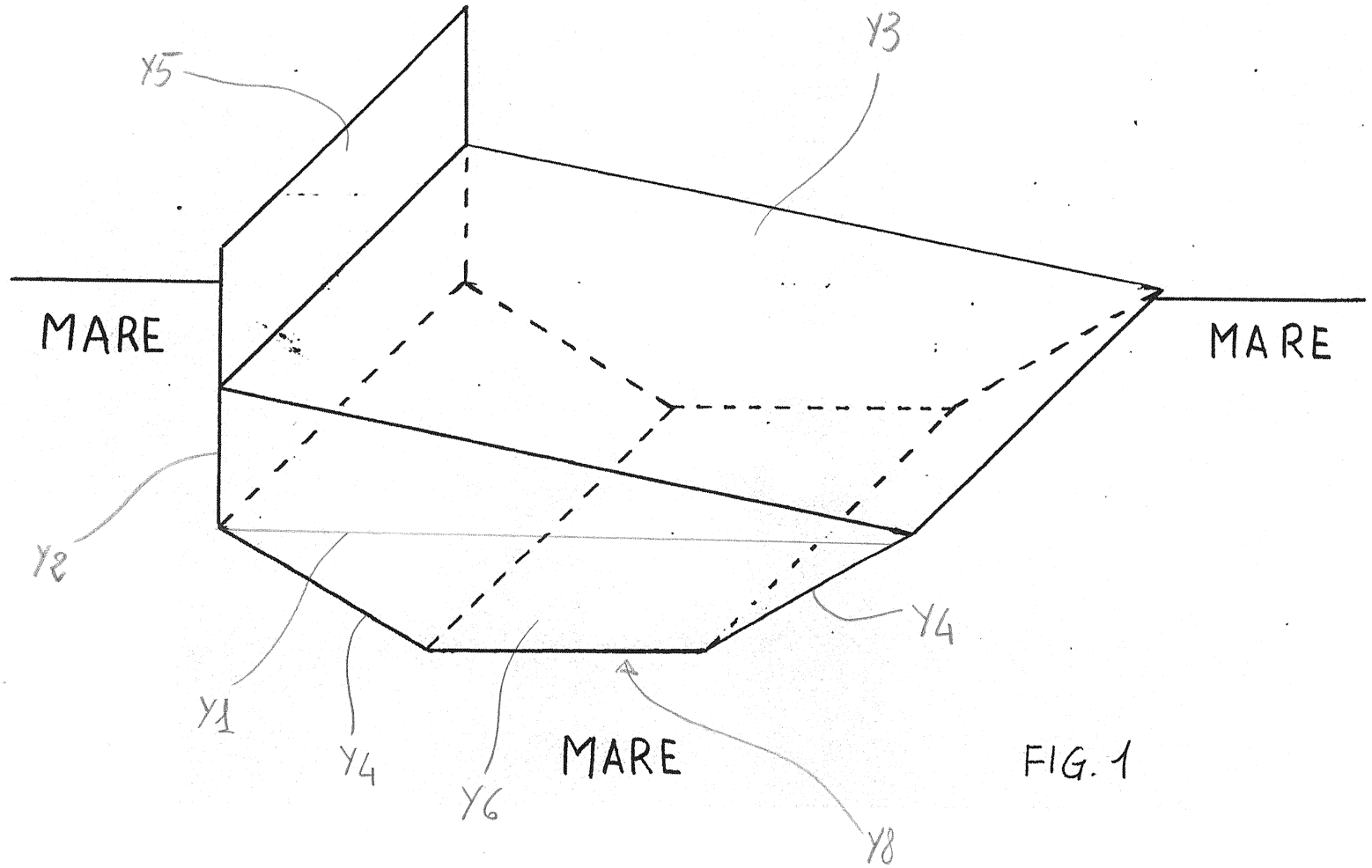

FIG. 1

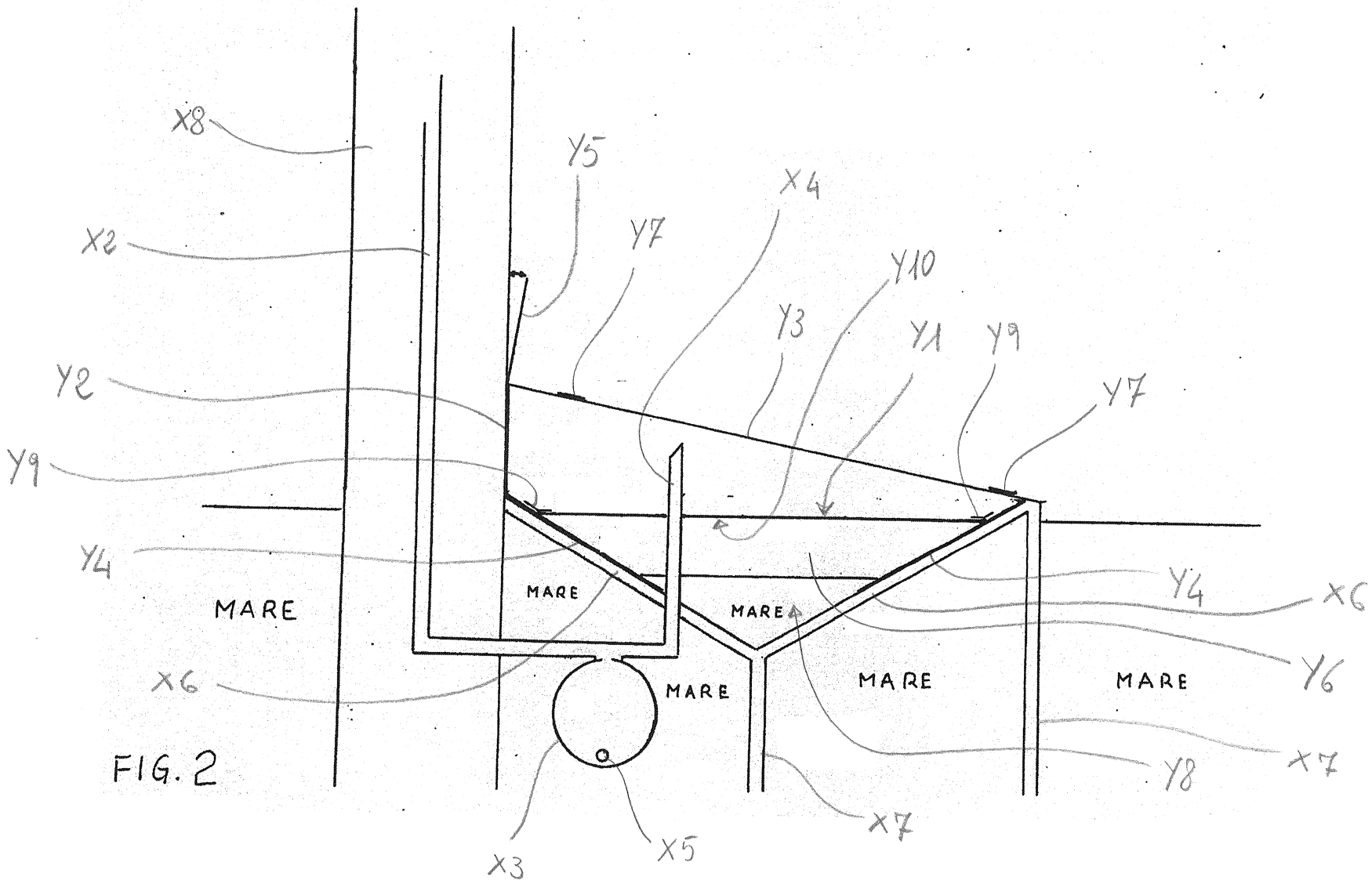
X8
X2
Y2
Y9
Y4
MARE
X6
Y5
Y7
X4
Y10
Y3
Y1
Y9
Y7
MARE
MARE
MARE
MARE
MARE
Y4
X6
Y6
Y8
X7
X7
X3
X5

FIG. 2